UNIVERSAL FILLER 750

Williames

Leading by Innovation

UNIVERSAL FILLER SHOWING SOIL ROTOR HEIGHT ADJUSTER AND SOIL GUIDES

Williames Pty Limited
A B N 42 004 320 834
103 Butlers Track Warragul
Victoria 3820 Australia
phone: +61 3 5623 5755
fax: +61 3 5623 5165
email: sales@whti.com.au
web: www.williames.com

UNIVERSAL FILLER 750

Williames

Leading by Innovation

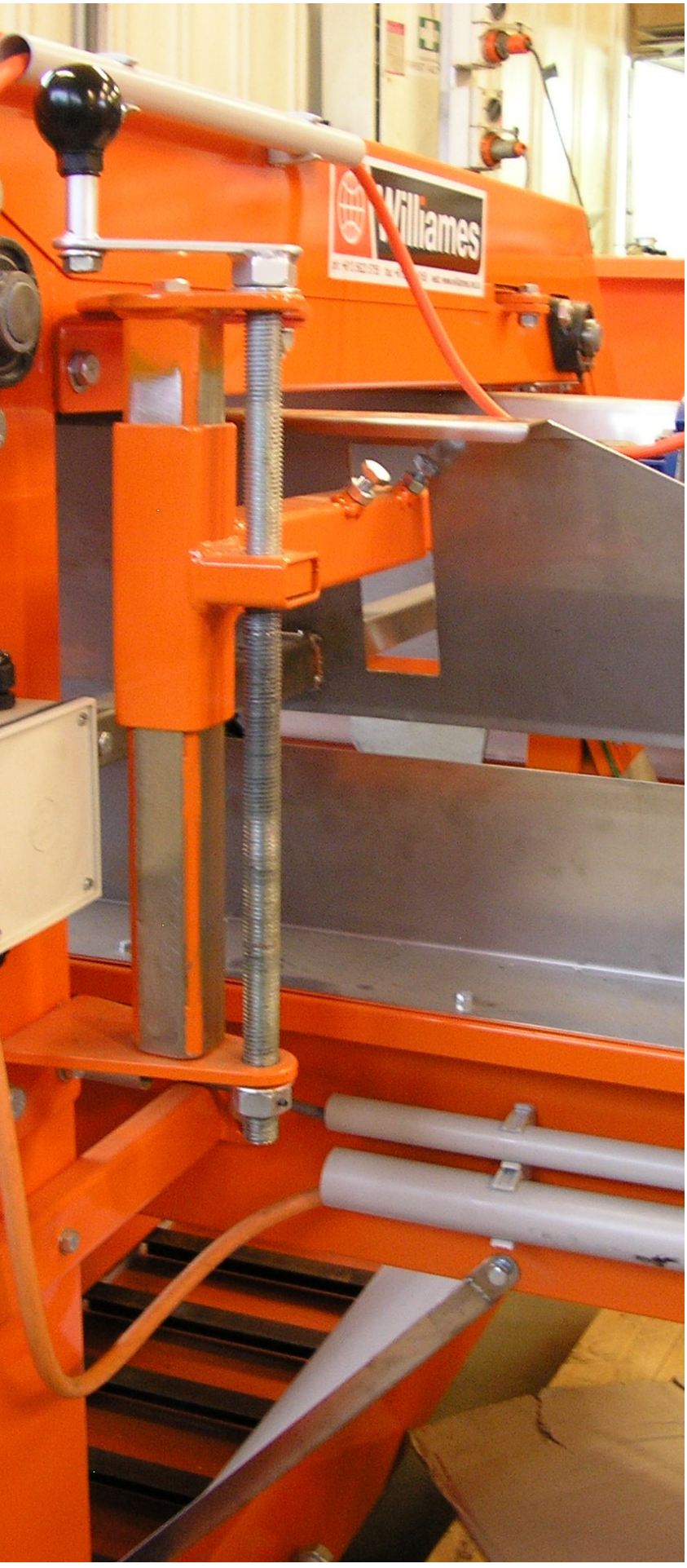

SOIL ROTOR HEIGHT ADJUSTER

750 UNIVERSAL FILLER is suited to high speed filling of a wide range of trays, pots, and punnets.

FEATURES

- Cleated chain conveyor to fix the position of trays
- High Capacity Drive
- Adjustable Soil Flow Control Gate
- Adjustable Soil Scraper
- Adjustable Soil Rotor
- Compression Roller and Scraper
- Rotary Bush to sweep the cell below the top of the tray to prevent root growth over-the-top, between cells
- Angled Powered Brush
- Integrated Soil Return units recycle the soil mix to prevent wastage and soil contamination
- Fingertip controls to vary the speed of soil flow filling the tray, the soil density in the tray and the speed at which the tray is moved by the belted conveyor beneath the filler
- 0.75 cubic metre capacity
- Pause control and emergency **STOP / START**
- Single or three phase power

OPTIONS

- Wheel kits are available for portability
- Conveyor lengths can be customized to suit requirements
- Bin extension

Williames Pty Limited
A B N 42 004 320 834
103 Butlers Track Warragul
Victoria 3820 Australia
phone: +61 3 5623 5755
fax: +61 3 5623 5165
email: sales@whti.com.au
web: www.williames.com

UNIVERSAL FILLER 750

Williames

Leading by Innovation

SOIL FLOW CONTROL ADJUSTOR

SOIL HOPPER WITH INTERNAL CLEATED SOIL ELEVATOR CONVEYOR

UNIVERSAL FILLER 750

Williames
Leading by Innovation

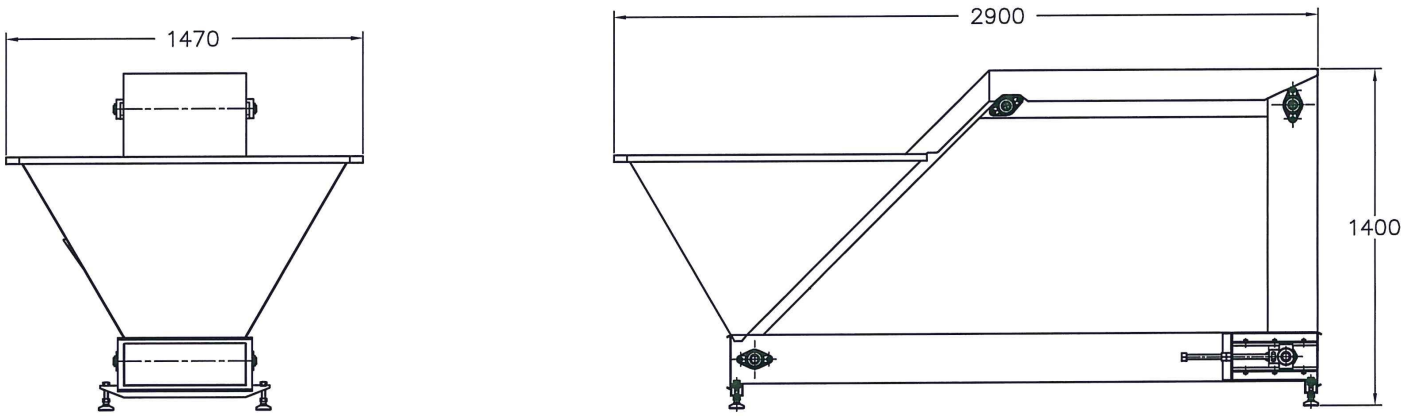

UNIVERSAL FILLER ST750

DIMENSIONS (UNIVERSAL FILLER ST750)

	METRIC	IMPERIAL
L	2900	114”
W	1470	58”
H	1400	55”