M200 SOIL MIXER

Williames

Leading by Innovation

Dual Axial & Rotational Mixing

… auger gives a gentle & fast mixing action without damaging the structure of the ingredients

Williames Pty Limited
A B N 42 004 320 834
103 Butlers Track Warragul
Victoria 3820 Australia
phone: +61 3 5623 5755
fax: +61 3 5623 5165
email: sales@whti.com.au
web: www.williames.com

M200 SOIL MIXER

Williames

Leading by Innovation

SIDE VIEW WITH SOIL ELEVATOR ON WHEELS

WILLIAMES M200 SOIL MIXER gives a gentle and fast mixing action without damaging the structure of the mix ingredients.

FEATURES

- Flat section helix auger ensures minimum damage to the soil mix
- Safety mesh cover
- 3 phase motor
- Robust construction means low maintenance and high productivity

OPTIONS

- Twin or single Bin Rotator
- Single phase motor with inverter
- Replacement liner
- Castor wheels
- Adjustable timer for automatic turn off
- Air or electronically operated discharge door
- Walkway
- Soil Elevator

DIMENSIONS: (APPROXIMATE)

M200 cu/m

	METRIC	IMPERIAL
L:	2300	84”
W:	1149	46”
H:	1881	71”

Williames Pty Limited
A B N 42 004 320 834
103 Butlers Track Warragul
Victoria 3820 Australia
phone: +61 3 5623 5755
fax: +61 3 5623 5165
email: sales@whti.com.au
web: www.williames.com

M200 SOIL MIXER

Williames
Leading by Innovation

REMOVE ALL BURR'S AND SHARP EDGES.

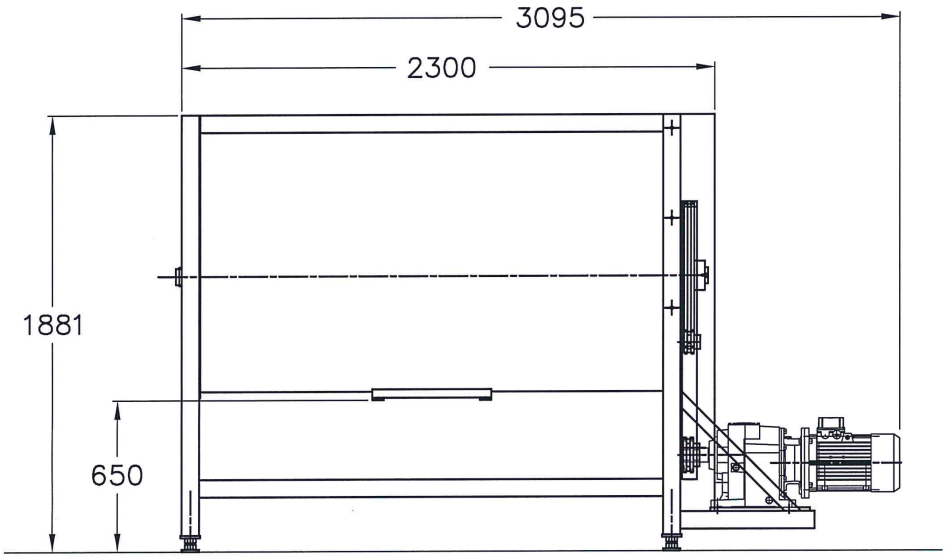

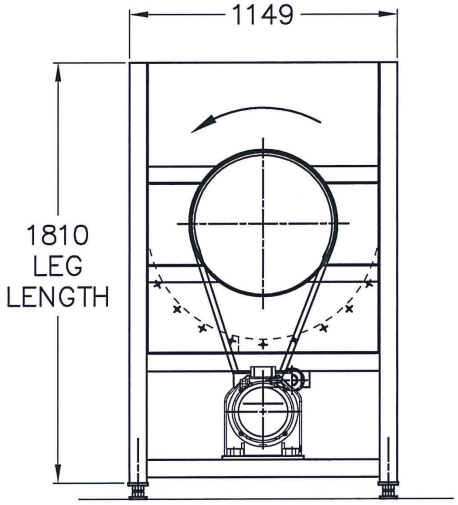

USED ON	QTY

REVISIONS:

ITEM	PART No	DESCRIPTION	QTY

UNAUTHORISED COPYING OF THIS DRAWING IS STRICTLY PROHIBITED

MACHINE NAME: M200 MIXER	A3	DRG No. US–002	REV
DRAWING TITLE: LAYOUT	MAT'L		QTY: OFF
	DRAWN: G.B		DATE: 26.7.16
WILLIAMES PTY LTD BUTLERS TRACK WARRAGUL VICTORIA AUSTRALIA 3820	CHK'D:		WEIGHT:
	SCALE: NTS		GEN TOL: ±0.125